RevNo	Revision note	Date	Signature	Che

Un official drawing, for illustration only

A-A

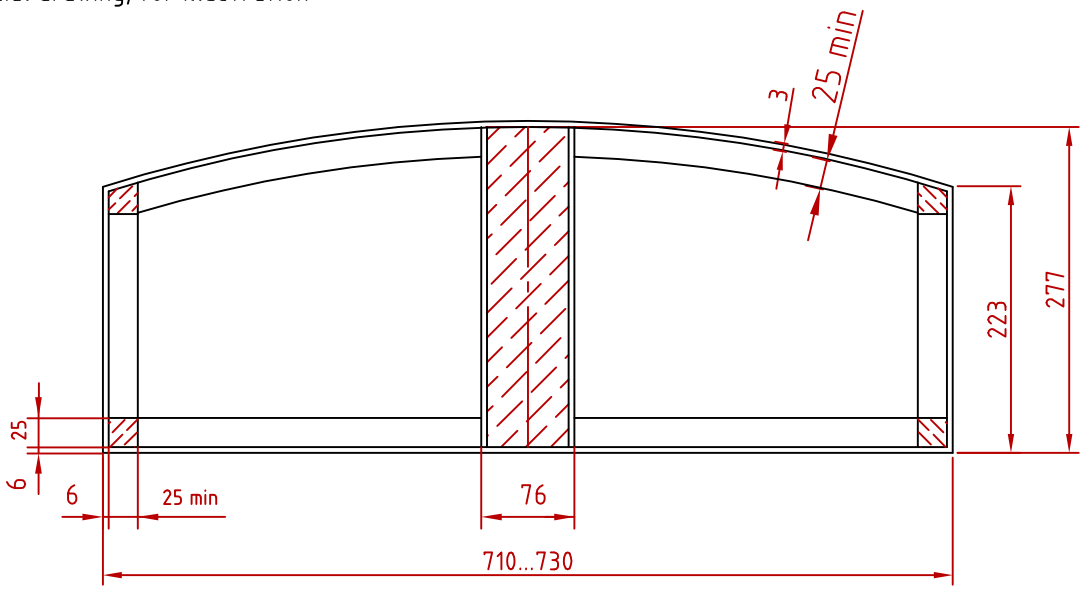

B-B

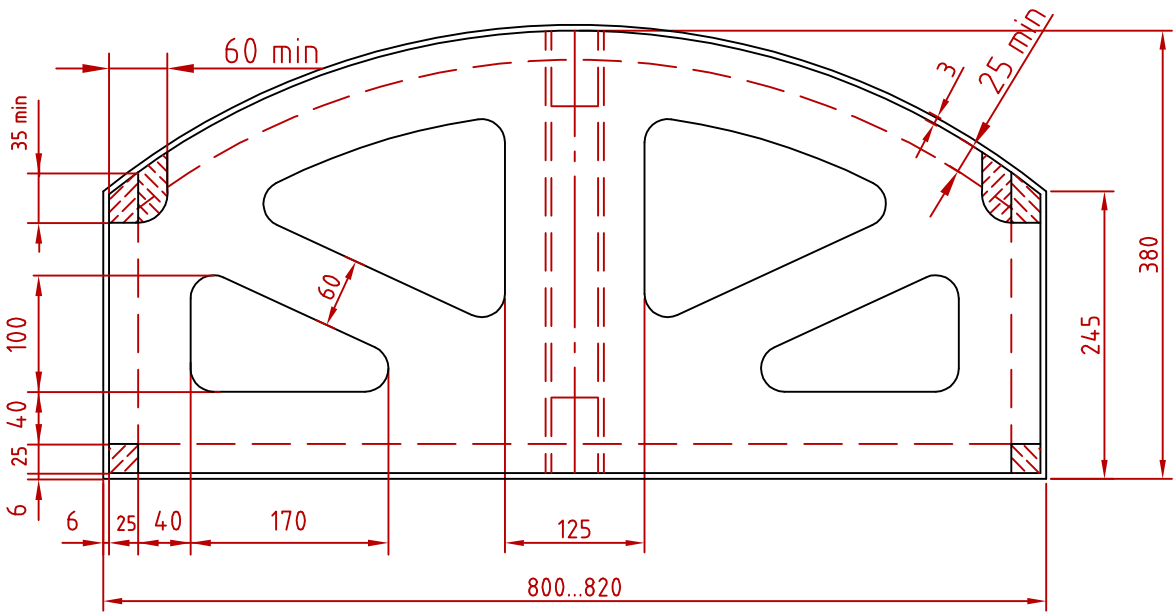

Itemref	Quantity	Title/Name, designation, material, dimension etc		Article No./Reference	
Designed by Eric_v.Holst	Checked by Kyynarpuu	Approved by - date TC- 10/05/99	Filename XVfuselage2	Date 01/05/99	Scale

IM-XVIYRA

MonotypeXV

Fuselage2

Edition

Sheet 2/2