Chock
Monotype-XV
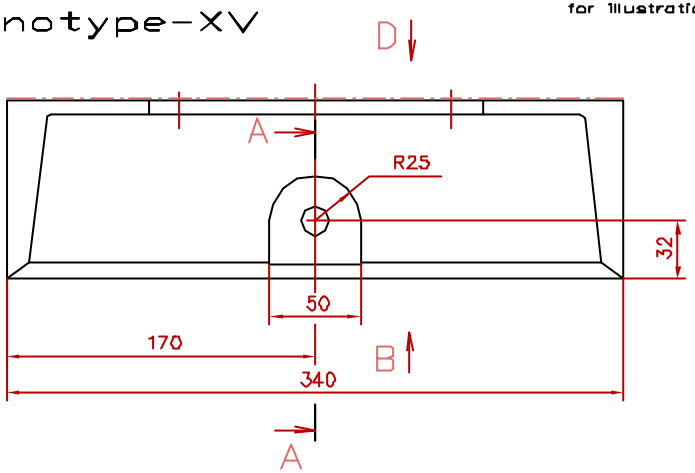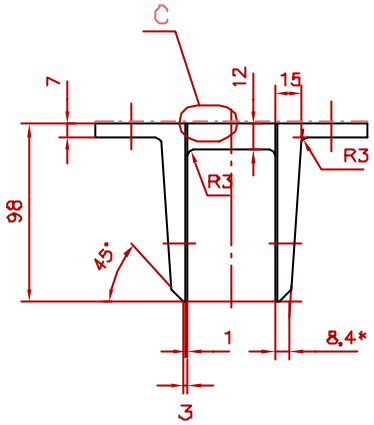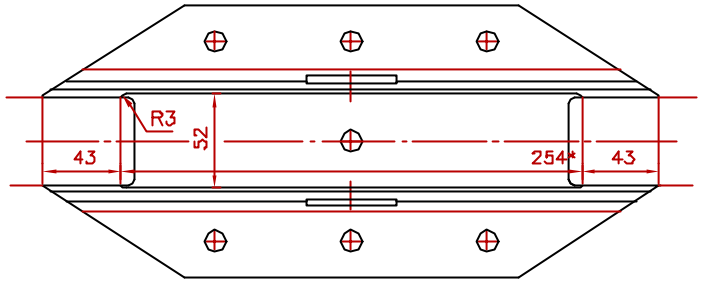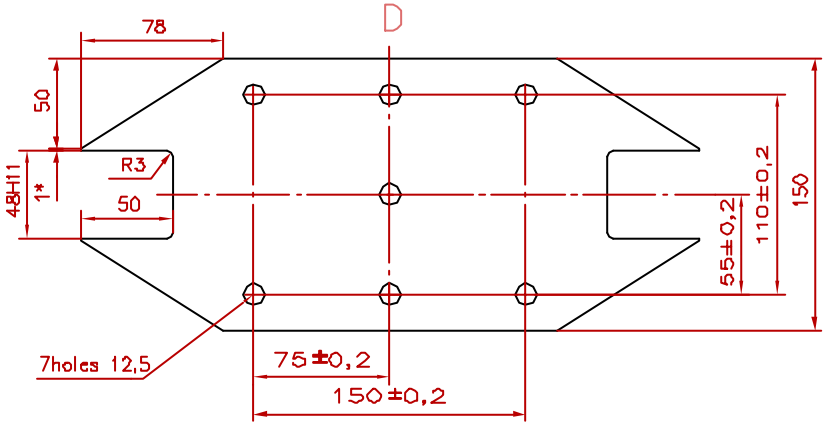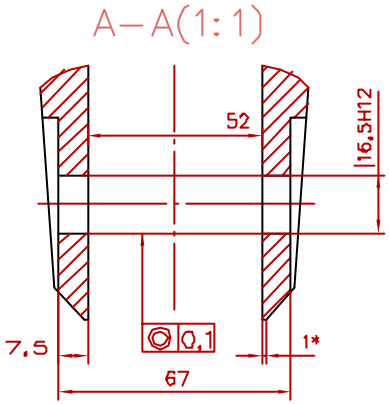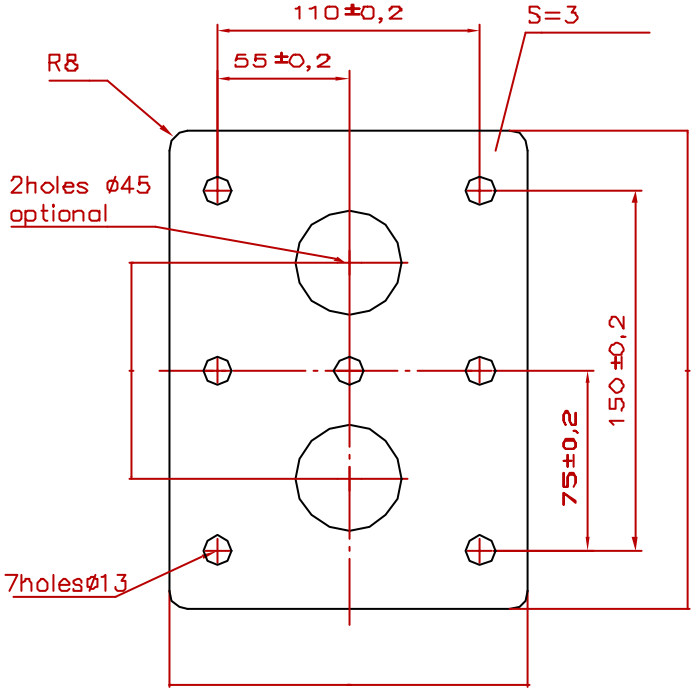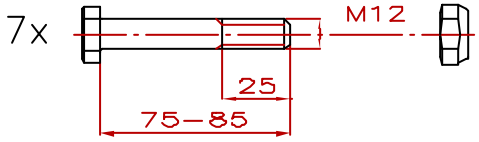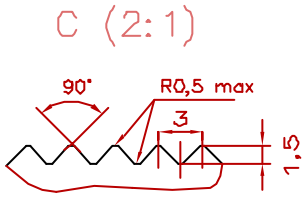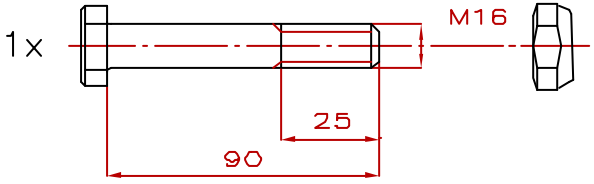
Un official drawing,
for illustration only